QB1W

75 Watt Quartz Bullet Flood with silicone O-ring gasket, thick tempered glass lens, internal and external cooling fins. Gold plated socket contacts and 250°C Teflon coated wires for extended lamp life. Lamp supplied.

Color: White

Weight: 1.0 lbs

Project:	Type:
Prepared By:	Date:

Lamp Info		Ballast Info	
Type:	T-4	Type:	N/A
Watts:	75W	120V:	N/A
Shape/Size:	N/A	208V:	N/A
Base:	N/A	240V:	N/A
ANSI:	N/A	277V:	N/A
Hours:	1,500	Input Watts:	75W
Lamp Lumens:	1,500		
Efficacy:	20 LPW		

Technical Specifications

Listings

UL Listing:

Suitable for wet locations. Suitable for mounting within 1.2m (4ft) of the ground.

Construction

Housing:

Precision die cast aluminum, 1/2" NPS threaded arm with locking swivel and EZ Grip lock nut fits all standard mounting covers.

Lens Gasket:

High temperature silicone gasket stays in place during relamping.

Reflector:

Semi-specular anodized aluminum.

Lens:

Thick, tempered glass.

Finish:

Our environmentally friendly polyester powder coatings are formulated for high-durability and long-lasting color, and contains no VOC or toxic heavy metals.

Electrical

Sockets:

Porcelain bi-pin GY 8 base with gold plated contacts and 250° C socket wires.

Other

Replacement Lamps:

.

Dimensions

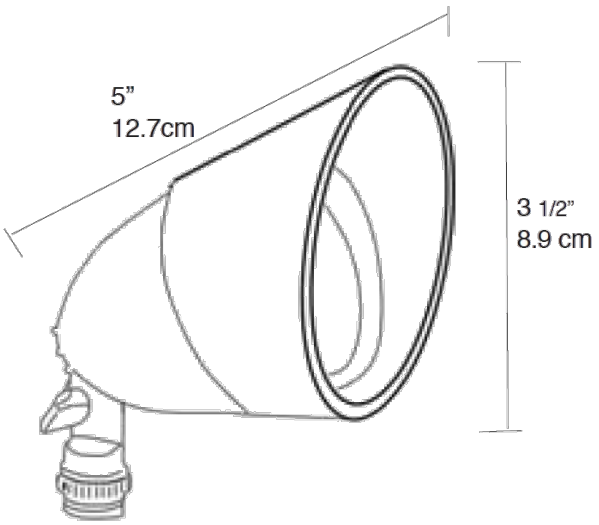

Features

- Integra Hood Glare Shield minimizes side glare and hood can be rotated
- Highest quality 120 volt quartz lamp included
- Thick, tempered glass lens with silicone O-ring gasket
- External and internal heat dissipating fins
- Arm with locking teeth tightens securely with just finger pressure
- Gold contacts prevent lamp and socket fusion due to electrolytic corrosion.
- Internal and external heat dissipating fins for cooler operation to extend lamp and fixture life

Copyright © 2014 RAB Lighting Inc. All Rights Reserved Note: Specifications are subject to change at any time without notice